Over Height Vehicle Detection System

Installation, Operations and Maintenance Manual

Models 3400-Z
PATENT #5,828,320

Z-Pattern™

JANUARY 2026

716 BLUECRAB RD STE B, NEWPORT NEWS, VA 23606-2678, USA
T: 757-223-7522 F: 757-223-7522 W: TRIGGINDUSTRIES.COM

TABLE OF CONTENTS

TABLE OF CONTENTS 2
TABLE OF FIGURES 3
ADDENDUM 4
    POWER 4
    LIGHTNING PROTECTION 4
FOREWORD 6
WARRANTY 6
SYSTEM OVERVIEW 7
    OVERVIEW 7
    SYSTEM DESCRIPTION 7
    SYSTEM IDENTIFICATION 9
SEQUENCE OF OPERATION 10
    COMPOSITION 10
    "Z-PATTERN" CONCEPT 10
    ALARM 11
    FAULT 12
    LED AND METER INDICATION 13
INSTALLATION AND REMOVAL PROCEDURES 15
    MECHANICAL CONNECTIONS 15
    ELECTRICAL CONNECTIONS 19
    OPTICAL ALIGNMENT 22
    FINE ADJUSTMENT 25
    OPERATIONAL CHECK 27
    REMOVAL PROCEDURES 28
TROUBLESHOOTING 33
    NORMAL OPERATION 33
    TROUBLE ANALYSIS 33
HARDWARE AND TOOLS 35
SPARE PARTS 38
NOTES 39

TABLE OF FIGURES

Figure 1: OHVDS Overview 7
Figure 2: Z-Pattern OHVDS 8
Figure 3: System Identification.....9
Figure 4: "Z-Pattern" Concept 10
Figure 5: Simplified Block Diagram 14
Figure 6: Three-Axis Mount Assembly Detail.....17
Figure 7: Three-Axis Mount.....18
Figure 8: Master Cabinet with Three-Axis Mount.....18
Figure 9: Cabinet Access Points 19
Figure 10: Wiring Diagram 21
Figure 11: Cross Section of Roadway 23
Figure 12: View Across Roadway 24
Figure 13: Master Cabinet Control Panel.....29
Figure 14: Remote Cabinet Control Panel 31

Table 1: System Eye Orientation.....10
Table 2: Master Cabinet Control Panel Features 30
Table 3: Remote Cabinet Control Panel Features 32
Table 4: Trouble Analysis 34
Table 5: Hardware and Fasteners - Cabinets 35
Table 6: Hardware and Fasteners - Triple Axis Mount.....36
Table 7: Required Tools 37
Table 8: Spare Parts List – Model 3400-Z.....38

ADDENDUM

POWER

This Installation, Operation and Maintenance Manual has been written to provide information based on the system that operates on 115VAC since this is the voltage generally used in the United States.

When using this standard manual, please substitute 230VAC or 24VDC as required, for any reference to System Power, schematic or functional drawings or Alarm Devices and note that any Trigg Industries supplied Alarm devices are designed to operate with the applicable system.

NOTE: If the system is configured to operate on 24VDC, it is important that the polarity of the 24VDC be verified before connecting this power to the system to reduce the possibility of damage. Not all manufacturers use the same color-coding for the wiring supplied with their solar equipment.

LIGHTNING PROTECTION

Lightning and overvoltage transients can cause serious damage to electrical equipment. While there is no product that will guarantee complete lightening protection to equipment, Trigg Industries provides supplemental lightning protection using MOV or SAD technology.

The Metal Oxide Varistor (MOV) is a device designed to limit transient voltage surge and divert surge current to ground. The device tends to self-destruct in an open-circuit mode and then offers no protection. This means that the second time a lightening hit occurs, damage to the equipment is almost certain. 230VAC system devices use MOV lightning protection devices.

The Silicon Avalanche Diode (SAD) is a device designed to limit transient voltage surge and divert surge current to ground. The device tends to self-destruct in a short-circuit mode, which trips the customer supplied AC power over-current protection. The SAD has a very fast response time and can absorb more energy for a given device. 115VAC system devices use SAD lightning protection devices.

To facilitate replacing these devices, they are installed externally on the System Power terminal strip. On older units, these devices were not factory installed. Each system includes a spare set of MOV or SAD. Replacement MOV and SAD assemblies are available from Trigg Industries.

To replace a shorted set, disconnect/turn off AC power to the equipment, remove the shorted set from the AC power terminal strip and install the spare set.

WARNING
The orientation of these devices is important. The lug without heat-shrink must be connected to the GND terminal of the System Power terminal strip.

FOREWORD

Every effort has been made to ensure the accuracy of this manual. However, TRIGG INDUSTRIES, LLC (TI) WILL NOT BE LIABLE FOR ANY CONSEQUENTIAL, INCIDENTAL, SPECIAL, EXEMPLARY OR OTHER DIRECT OR INDIRECT EXPENSES, DAMAGES OR OTHER LOSS ARISING FROM THE USE OF THIS MANUAL.

WARRANTY

Equipment manufactured by Trigg Industries, LLC is guaranteed to the original purchaser to be free from defects in material and/or workmanship for two years from the date of shipment when the equipment is used in accordance with operating instructions.

THE ABOVE WARRANTY IS IN LIEU OF ANY OTHER EXPRESS OR IMPLIED WARRANTY, CONDITION OR GUARANTEE BY TRIGG INDUSTRIES, LLC **INCLUDING ALL IMPLIED WARRANTIES OF MERCHANTABILITY AND ALL IMPLIED WARRANTIES OF FITNESS FOR A PARTICULAR PURPOSE,** OF THE EQUIPMENT LISTED HEREIN. **SOME STATES DO NOT ALLOW THE LIMITATION OR EXCLUSION OF IMPLIED WARRANTIES, SO THE ABOVE LIMITATIONS MAY NOT APPLY TO YOU.**

TRIGG INDUSTRIES, LLC WILL NOT BE LIABLE FOR CONSEQUENTIAL, INCIDENTAL, SPECIAL, EXEMPLARY OR OTHER LOSS, WHICH MAY BE INCURRED BY THE CUSTOMER AS A RESULT OF FIELD REPAIR, INSTALLATION OR ANY OTHER REASON.

Doc: trigg-ohvds-manual-a1z-pattern.docx
Revised January 28, 2026

U.S. PATENT NO. 5,828,320

SYSTEM OVERVIEW

OVERVIEW

This section provides the description of the Over Height Vehicle Detector System (OHVDS) and configuration, its operational characteristics, and its performance specifications.

OHVDSs are active sensing devices installed along roadway sections leading to a tunnel or an overpass to detect over height vehicles and warn its driver of potential damage to his vehicle, the tunnel (or overpass), or both, if appropriate actions are not taken. The OHVDS can interface with a Central Computing System (CCS) via Local Field Controllers (LFC). Upon detection of a valid over height condition, the OHVDS sends a signal to a Variable Message Sign (VMS) or Blankout Sign (BOS) to display warning and instruction messages to the driver of the over height vehicle. The OHVDS also sends a status signal to the LFC to verify that the OHVDS is in working condition. **Figure 1** shows the overview of the OHVDS in the context of the LFC and the VMS.

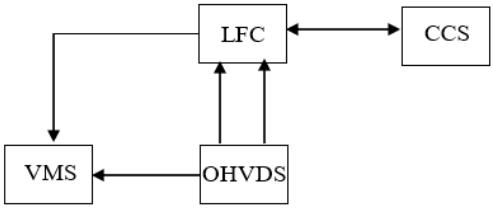

Figure 1: *OHVDS Overview*

SYSTEM DESCRIPTION

The OHVDS consists of two narrow beam visible red and/or infrared source and detector pairs, associated power distribution and control electronics. The two source eyes transmit the beams in parallel but opposite in direction. This feature allows for single-beam operation in the event of sun blinding in one of the detectors.

The source/detector pair is contained in two separate housings as shown in **Figure 2**. The housings can be mounted via wall mounts (with limited height adjustment) or on support pole structures using either mounting brackets that allow for height adjustments, three-axis mounts that provides for adjustment in three planes but relies on adjustable poles for height adjustments.

Under normal operation, the OHVDS is configured for dual beam operation. In this configuration, directional discrimination is selectable through a switch and is set according to the direction of traffic. When the beams are broken in the proper sequence, the system will provide relay closures to the VMS or BOS and the LFC, indicating over height detection. The OHVDS also feeds a continuous status signal to the LFC to indicate that the OHVDS is functioning normally.

In the case where one of the sources or detectors fails or is in a sun blinding condition, the OHVDS falls back to a single beam operation.

In the case where both beams have been compromised (blocked, fail, or loss of power to either Master or Remote), the OHVDS enters a fault condition by opening the fault relay contact, which is normally held closed, breaking the continuous signal to the LFC.

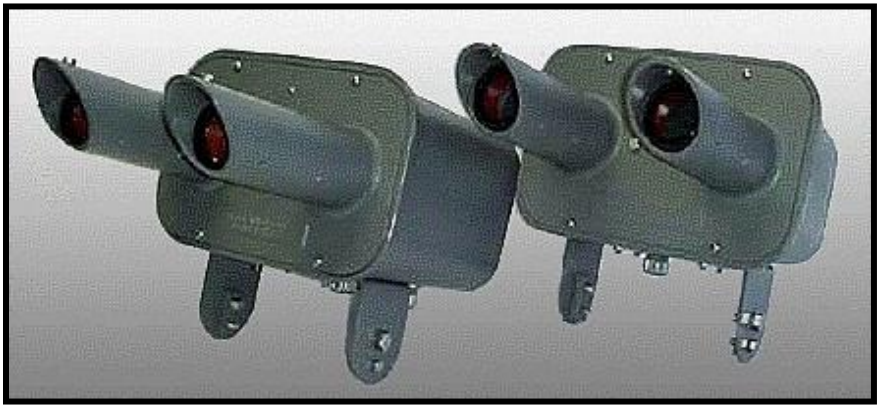

***Figure 2**: Z-Pattern OHVDS*

SYSTEM IDENTIFICATION

Interpretation of system identification information for technical assistance or other application purposes.

Each cabinet has an identification plate physically attached to it on the control panel and the external housing. The model number of the system and the specific serial number of the unit are stamped on these plates. This information should be used when referring to a particular unit for any reason. The serial number includes all information required by Trigg Industries, LLC to address technical concerns or application purposes of the unit in question.

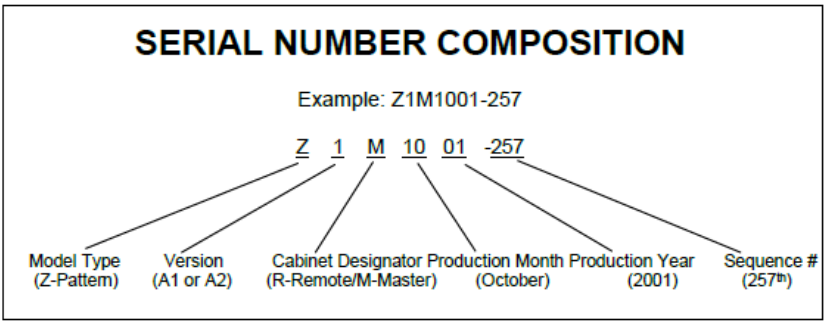

Figure 3: *System Identification*

SEQUENCE OF OPERATION

COMPOSITION

The Trigg Industries Z-Pattern series of Over Height Vehicle Detectors employ pulsed Visible Red and/or Infrared (IR) source/detector eyes. Model 3400-Z uses a combination of Visible Red and IR.

Figure 4 and Table 1 illustrate the detection methodology differences between models and orientation of the different eyes with respect to each cabinet. ***All orientation is given from the Master cabinet viewing the remote***. The terms "IR-A" and "IR-C" refer to different modulations of the infrared source. In each model, the Master cabinet contains all control, fault detection, and alarm electronics. A two-conductor shielded wire carries the signal from the Remote cabinet detector back to the Master cabinet.

"Z-PATTERN" CONCEPT

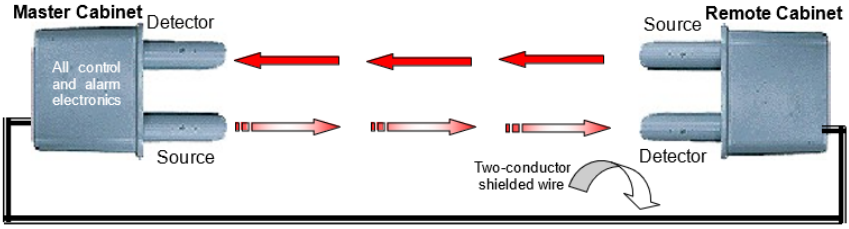

Figure 4: *"Z-Pattern" Concept*

Table 1: *System Eye Orientation*

Model 3400-Z			
Master Cabinet		**Remote Cabinet**	
Red Detect	Left	Red Source	Left
IR-A Source	Right	IR-A Detect	Right

ALARM

If an over height vehicle is moving from left-to-right, the direction selected for detection, the Lead eye beam will be interrupted first, and a window signal will be generated to allow detection to occur within a vehicle speed of .5mph to 75mph. If the Lag eye beam is interrupted during this window, a valid alarm signal is generated which in turn starts the alarm timer. The Alarm Time Control sets the length of the alarm timer.

The alarm timer causes two alarm relays to energize (OHV1 and OHV2) for the alarm time. These are Form C relay contacts that provide isolation between the OHVDS, the LFC and VMS.

If another vehicle is detected during the alarm time, the alarm timer starts over. Thus, if the alarm time is set for 10 seconds and 5 seconds into the alarm time another over height vehicle is detected, the total alarm time will be 15 seconds.

If the system detects an over height in the reverse direction, there will be about a 5 second delay before over height detection is again enabled.

FAULT

Internal Fault Signal

The fault detection circuits incorporate an integrator that will trigger an internal fault signal if either beam is interrupted for 15 +/- 5 seconds. This time provides for intermittent interference such as sun reflections or other sources. The fault signal is used to switch the OHVDS to single beam mode and detect over height vehicles with the remaining beam.

There is no direction discernment in the single-beam mode but over height detection is maintained.

If the fault condition is abated, there is an approximate 90-second delay to allow the integrator signal will return to the good state and the system to stabilize before the OHVDS returns to normal dual-beam operation.

Fault Relay

A fault relay (FAULT), form C contacts, is normally energized and will provide a warning to the LFC by de-energizing under one or more of the following conditions:

1. Loss of input power to the Master cabinet.
2. Loss of input power to the Remote cabinet after a 15 +/- 5 second delay.
3. Internal DC voltage loss (power supply failure) in the Master cabinet
4. Both beams interrupted continuously for 15 +/- 5 seconds

Optional Fault Modes

The system can be factory-configured for the following relay operation:

A. 10 second warning if an over height vehicle is detected in single beam mode.
B. 1 second fault relay toggle if the OHVDS is in single-beam mode.

NOTE: Optional fault relay modes must be specified at time of ordering.

LED AND METER INDICATION

There are four green LEDs and a meter provided for detection indication and fault indications. The bottom align LEDs are normally ON when both beams are detected. The upper LEDs are normally ON when there is no fault condition with either beam

The meter will read about 8 VDC when the Align-Operate Switch is placed in the Lead or Lag eye position and both beams are detected.
It should be noted that both the LEDs and meter are used in a GO/NO-GO mode.

Figure 5 shows the functional Master-Remote electronics system design in block format. For this discussion, the Direction Select Switch is set L-R and the Master cabinet is mounted on the side of the road where traffic goes toward the obstruction. This defines "left-to-right" as the direction of interest when viewing the Remote from the Master.

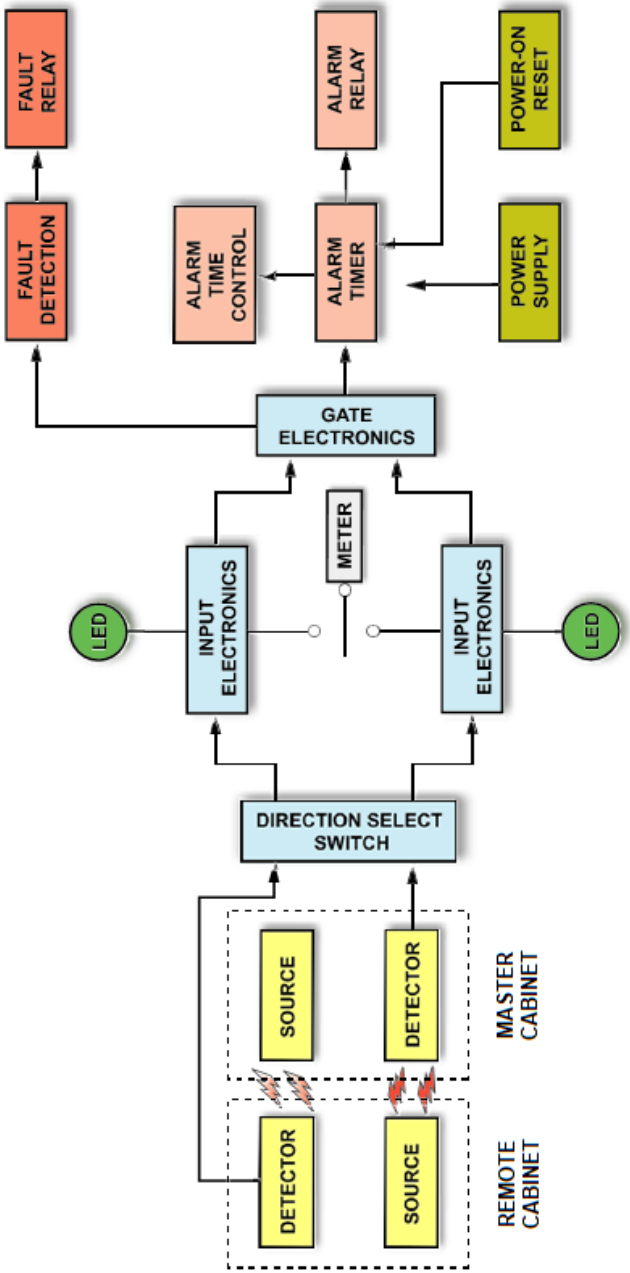

Figure 5: *Simplified Block Diagram*

INSTALLATION AND REMOVAL PROCEDURES

MECHANICAL CONNECTIONS

1. Ensure the poles (or other mounting structures) are near vertical.

2. The cabinets are shipped with the Three-Axis Mounts (TAM) disassembled. To assemble the TAMs proceed as follows (**Figure 6)**:

   a. Place the roll rotation component inside the pitch rotation component such that the 1/2-inch threaded bolts (with washers) can go through both holes and thread into the pivot blocks.

   b. Adjust the roll component such that the 5/16-inch threaded bolts (with washers) can go through both holes and thread into the pivot blocks.

   c. Align all components so they are near vertical and tighten all bolts.

CAUTION: Cabinets & TAMs are heavy and may tip in pitch and/or roll. Use care during installation to prevent dropping units. Ensure alignment bolts in all axes are tightened to keep unit stabilized. Check bore sight alignment once tightened.

3. Mount the Master and Remote cabinets with the top of the eyes of each unit at the desired detection height using the 5/8-inch hardware. Tighten the 5/8-inch nut just enough to allow for horizontal cabinet alignment. (Do not tighten the four setscrews in the heading rotation component at this time.)

4. Open the bore sight holes in the two cabinets by removing the #4-40 screws on the top front and top back of each cabinet **(Figure 9)**.

5. Establish the bore sight horizontal alignment by turning the cabinets manually. Next, use the axis adjustments to accomplish the vertical alignment. The opposite cabinet should be seen as centered in the bore sight holes. Tighten alignment hardware. Check bore sight images.

NOTE: The previous steps are for in-field alignment. The Factory Optical Alignment procedures must be accomplished to ensure the best "center of envelope" aiming of "eye to eye". The bottom LEDs and meter can be used for alignment purposes so as to position both the Remote and Master eyes in the "center of envelope."

CAUTION: Always replace #4-40 screws in bore sight holes prior to leaving installation to prevent water intrusion.

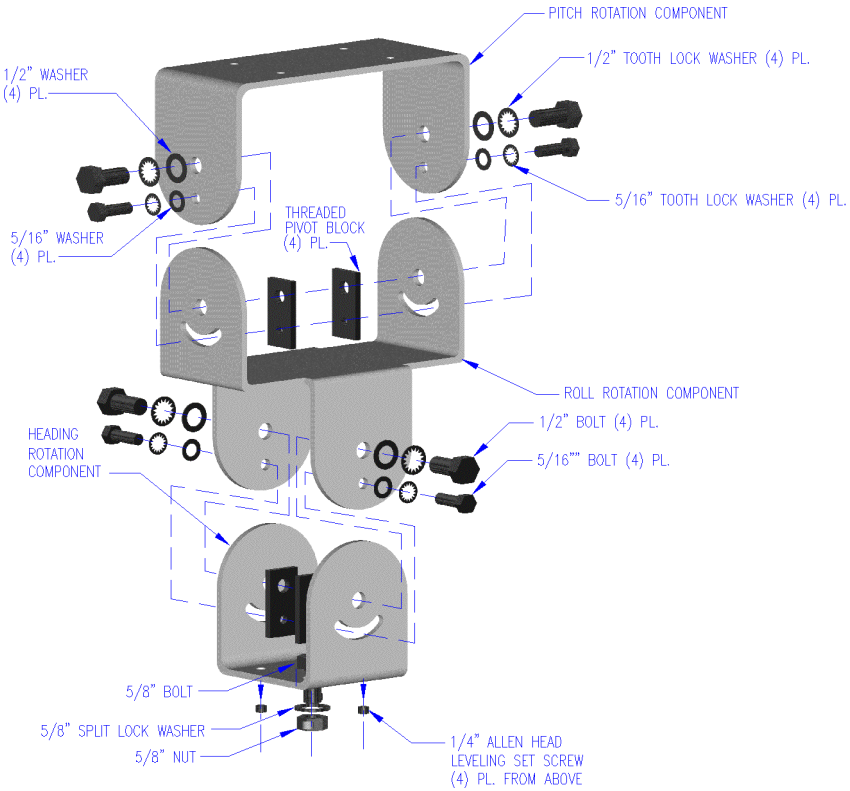

Figure 6: *Three-Axis Mount Assembly Detail*

Figure 7: *Three-Axis Mount*

Figure 8: *Master Cabinet with Three-Axis Mount*

ELECTRICAL CONNECTIONS

1. Remove back plates from both cabinets.

NOTE: Observe back plate label orientation when reinstalling. Warning labels should face inside the cabinet.

2. Observe location of connection access points on the Master cabinet (**Figure 9)** with respect to its control panel terminal strips. Orient cables accordingly before beginning connections. Both cables on the Remote cabinet will be fed through the same access point.

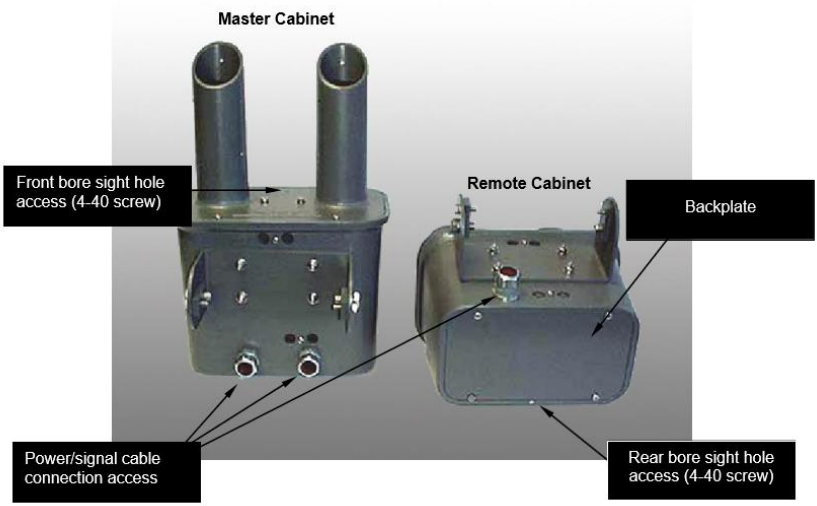

Figure 9: *Cabinet Access Points*

3. Feed cables through the cable connection access points in the bottom of each cabinet.

4. Prepare wire ends for attachment to terminal strips. Connection using spade lugs is optional but recommended when using stranded wire.

CAUTION: Exercise caution when making connections to the terminal strips with a flat blade screwdriver. Blades more than 1/4 inch width may damage the terminal strips.

NOTE: Use **Figure 10** for reference in the next two steps.

5. First connect the two-conductor shielded wire between the Remote (TS2) and Master (TS5) cabinets. Only the Remote end of this cable should be grounded to prevent ground loops and false alarms.

6. Connect power to the Remote cabinet first (TS1) and then the Master (TS1) cabinet. The Fault LED and four LE/LA LEDs will illuminate indicating both cabinets are in general alignment and are functional.

NOTE: It is best to complete the Optical Alignment before connecting the alarm wiring to prevent generating false alarms.

7. Upon completion of electrical and signal connections, tighten the cordgrip lock nut at each connection access point.

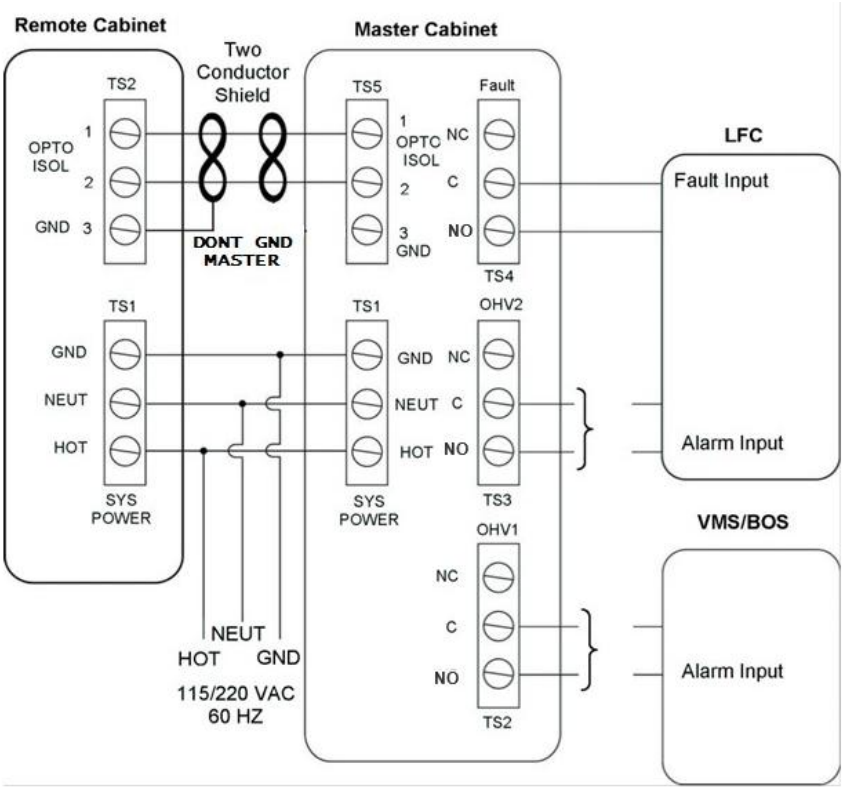

Figure 10: *Wiring Diagram*

OPTICAL ALIGNMENT

PRELIMINARY

If possible, the cabinets should be positioned so that the eyes have about a six-degree angle from early morning to late afternoon direct sunlight.

1. Set the line of sight across the roadway, parallel (or as close as possible) to the slope of the road in the direction of interest. Refer to **Figure 11**.

2. Tilt the Remote and Master cabinets to make the plane described by parallel lines of sight between the Remote and Master eyes parallel to the roadway under the lines of sight in the direction of interest. Refer to **Figure 12**.

3. If the lines of sight cross the roadway at right angles to direction of travel, then tilt = grade.

NOTE: For installations with very difficult/complex roadway contours, proceed with Step 4. All others should proceed to the Fine Adjustment procedures on Page 22.

4. Adjust the height of the detection zone down from the desired height until there are an excessive number of false alarms, and then up until the false alarms disappear. This provides a practical adjustment for uneven roads.

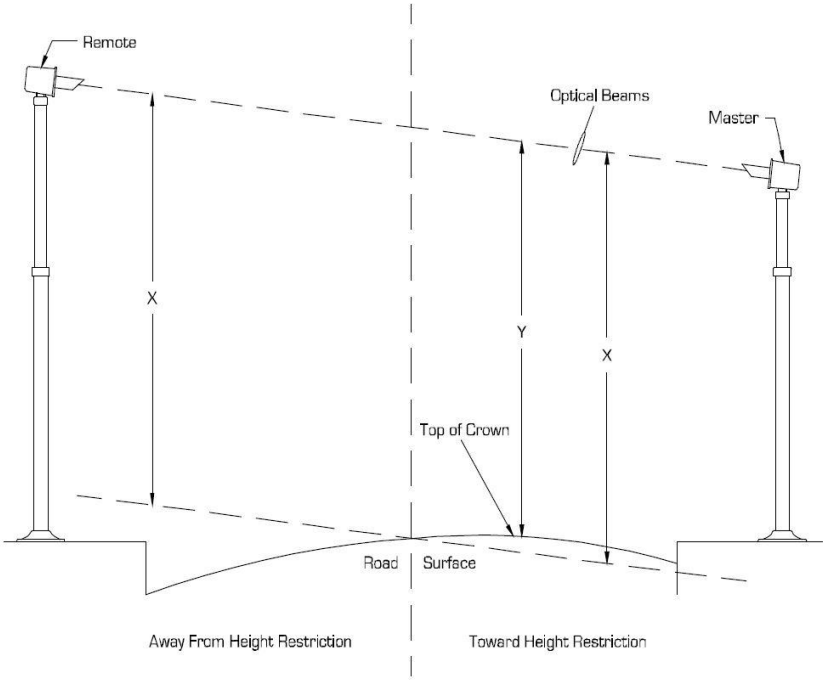

Figure 11: *Cross Section of Roadway*

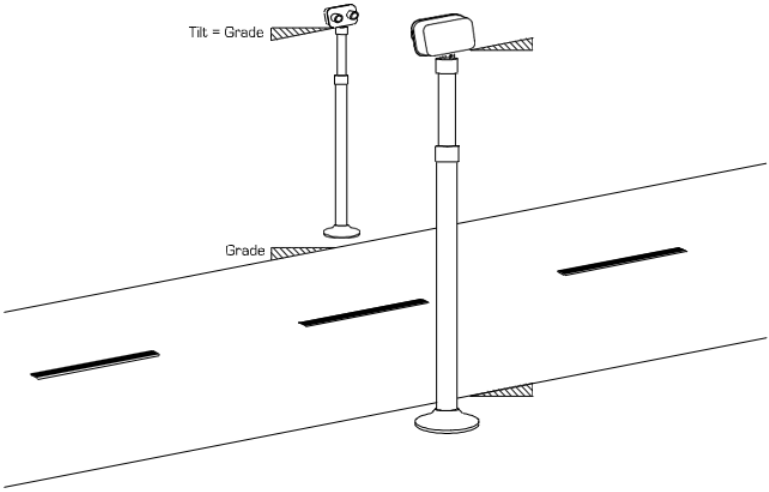

Figure 12: *View Across Roadway*

FINE ADJUSTMENT

Refer to **Figures 13 and 14** for the following:

1. To obtain the best optical alignment, place the Lead-Lag Alignment Switch (LE-LA) in the LE position and adjust the Master cabinet in the horizontal plane (left and right) to determine where signal loss occurs for the lead eye. This should occur at about the same offset for each side (left and right). If there is a large difference between left and right, the remote cabinet may need adjustment.

2. Place the Lead-Lag Alignment Switch in the LA position and repeat Step 1.

NOTE: Since the lead and lag eyes are about 7 inches apart; there will be some difference in indications at the "end of envelope."

3. The following steps must be accomplished by two people.

   a. Person 1 observes the LE and LA LEDs in the Master cabinet while Person 2 adjusts the Remote cabinet in the horizontal plane. Person 1 calls out the results of this action to set the "center of envelope" for both the lead and lag eyes in the Remote cabinet. Once the alignment is completed, the Align Switch may be returned to the center "off" position.

   b. Persons 1 and 2 tighten all bolts firmly while ensuring that alignment remains correct. The Three-Axis Mount has locking bolts for the pitch and roll axes and set screws for the horizontal axis. The 5/8-inch nut should be tightened to ensure mechanical stability.

4. Repeat Steps 1 through 3 above for vertical planes.

5. Connect alarm wiring (if not already connected) and test system for proper operation.

6. The Bird Perch Denial Rod (packaged in the shipping carton) is designed to prevent birds from landing on an eye cone and possibly setting off a false alarm by the head or tail of the bird breaking the transmitted beam.

7. It is recommended that these rods be installed on all eye cones to ensure that landing birds cannot cause a false alarm. Install by

removing the screws from the top front of the eye cones and replacing these screws with the bird perch denial rods.

NOTE: Based on the environmental conditions at each location, it is suggested that both the Master and Remote eyes be cleaned with a soft brush to remove airborne contaminants on an "as required" basis.

NOTE: If the #4-40 screws have been removed from the bore sight holes, replace screws before proceeding.

OPERATIONAL CHECK

The following procedures establish that the OHVDS is operating properly once installed and connected.

Refer to **Figures 13 and 14** for the following:

a. Note at the Master Control Panel that the four Align LEDs and one Fault LED are ON and the meter reads 8VDC +/- 1VDC when the Align Switch is placed in the LE or LA position.

b. Set the Alarm Time Control for the desired length of time (generally from 10 to 15 seconds).

c. Using an object approximately 2 inches in diameter, interrupt the beams by moving the object slowly (.5 mph minimum speed simulation) in the direction selected for detection. The alarm (bell/and or sign) should activate for the second alarm time +/- 3 seconds.

d. Using the same object as in step three above, interrupt the beams by moving the object quickly (high speed simulation) through the plane of the beams in the direction selected for detection. The alarm (bell and/or sign) should activate for the selected alarm time +/- 3 seconds.

e. Using the same object as in step four above, interrupt the beams in the opposite direction of that selected for detection. No alarm should activate.

Once operational, the system may be periodically tested from the ground using a long pole (approximately 3 inches in diameter) to interrupt the beams in the direction selected for detection within the .5 to 75mph criteria.

REMOVAL PROCEDURES

1. Remove power to the Remote and Master cabinets.

2. Remove back plate from unit to be removed (**Figure 9**).

3. Disconnect cable from terminal strips (**Figure 10**).

CAUTION: Exercise caution when disconnecting cabling from the terminal strips with a flat blade screwdriver. Blades more than 1/4-inch width may damage the terminal strips.

4. Reinstall back plate(s).

NOTE: Observe back plate label orientation when reinstalling. Warning labels should face inside the cabinet.

CAUTION: The cabinets and TAMs are heavy and may tip in pitch and/or roll. Use care during removal to prevent dropping the units.

5. Disconnect unit from pole by the 5/8-inch bolt in the base component of the Three Axis Mount.

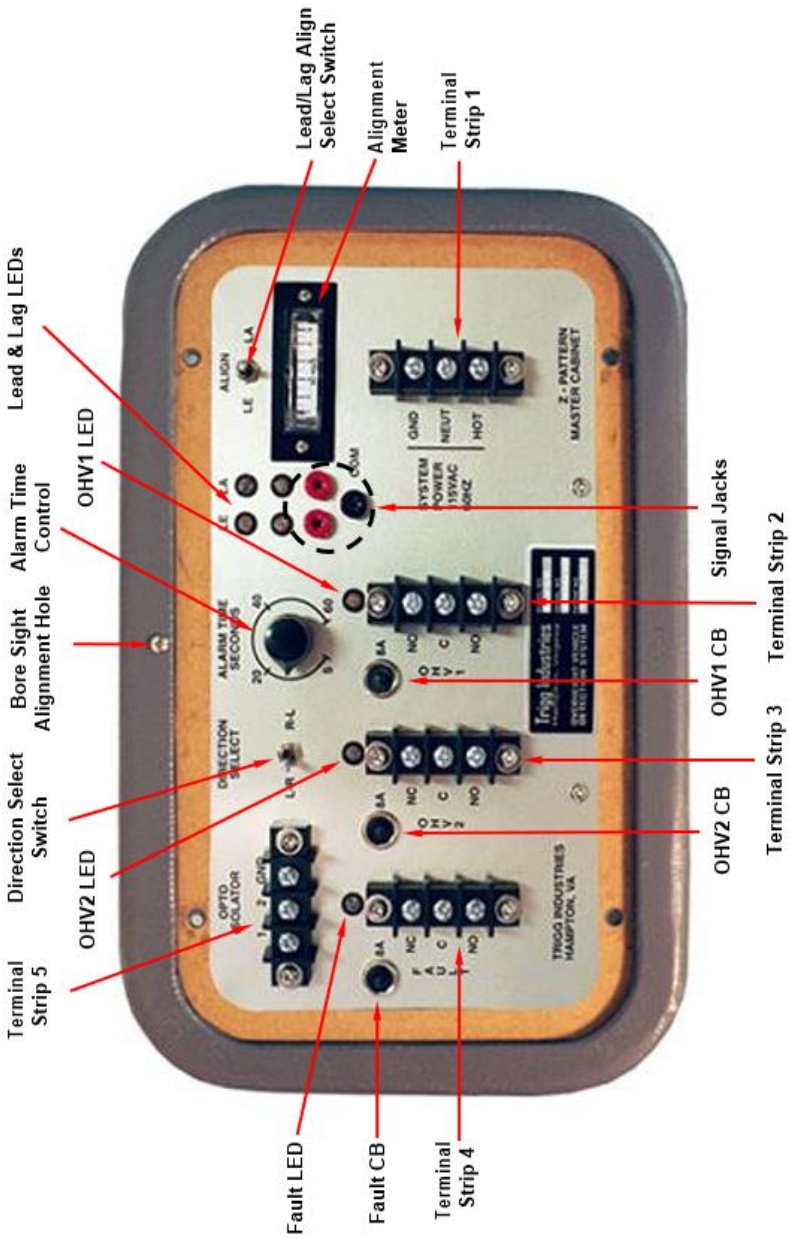

Figure 13: *Master Cabinet Control Panel*

Table 2: *Master Cabinet Control Panel Features*

FEATURE	FUNCTION
Terminal Strip 1	Provision to connect input power
Terminal Strip 2	Provision to connect Alarm Relay (OHV1) contacts
Terminal Strip 3	Provision to connect Alarm Relay (OHV2) contacts
Terminal Strip 4	Provision to connect Fault Relay contacts
Terminal Strip 5	Provision to connect signal wire from Remote cabinet (carries Remote detector signal back to Master cabinet)
Align-Operate Switch	Connects LEAD or LAG eye signal to Meter for alignment
Upper Green Lead/Lag LEDs	When ON, indicates no fault with the LEAD or LAG eye
Lower Green Lead/Lag LEDs	When ON, indicates the LEAD and LAG eyes are in normal operation
Meter	Used for GO/NO-GO alignment. Reads 8VDC +/- 1VDC in GO
Direction Select Switch	Selects which direction an over height vehicle must be traveling to activate the alarm. Left to Right is defined as viewing REMOTE cabinet from MASTER cabinet.
Alarm Time Control	Sets the duration of Alarm Time from 5 to 60 seconds.
Fault CB	Protects load and relay contacts
OHV1 CB	Protects load and relay contacts
OHV2 CB	Protects load and relay contacts
Fault LED	When ON indicates relay is energized
OHV1 LED	When ON indicates relay is energized
OHV2 LED	When ON indicates relay is energized
Signal Jacks	EYE output test points (DEPOT maintenance)

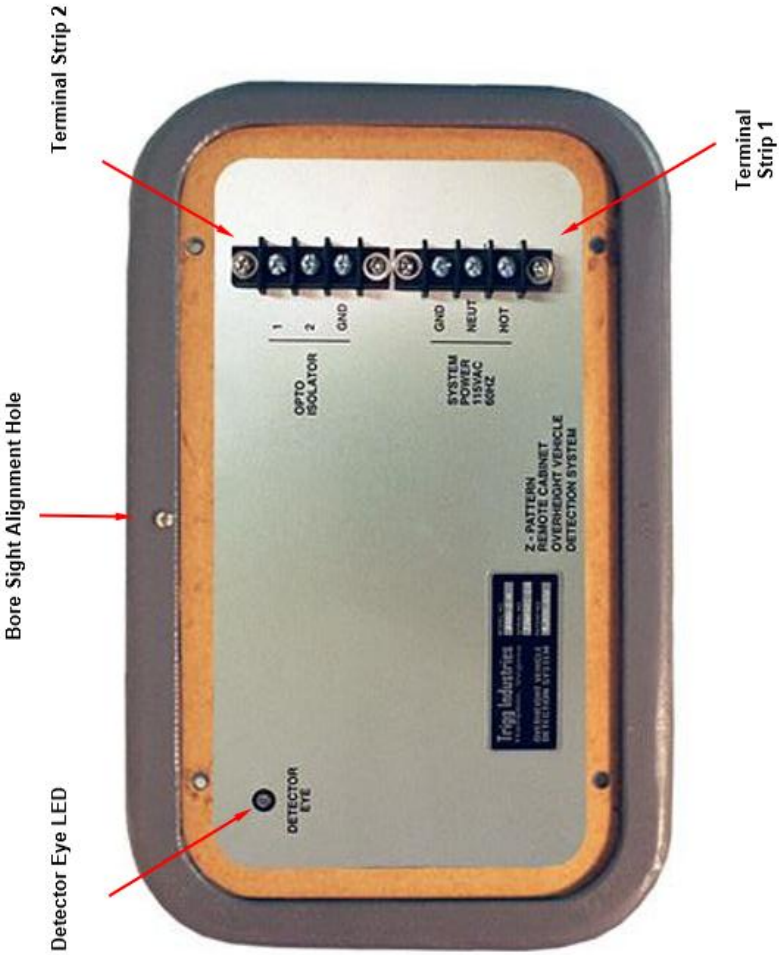

Figure 14: *Remote Cabinet Control Panel*

Table 3: *Remote Cabinet Control Panel Features*

FEATURE	FUNCTION
Terminal Strip 1	Provision to connect input power
Terminal Strip 2	Provision to connect detector signal to MASTER cabinet
Detector Eye LED	When ON, indicates that the detector is receiving the transmitted signal from the MASTER cabinet and in general alignment

TROUBLESHOOTING

NORMAL OPERATION

When installed, aligned, and operating properly, the Master cabinet should indicate the following:

1. Upper set of LEDs illuminated.

2. Lower set of LEDs illuminated.

3. Fault LED illuminated.

4. When the Align switch is positioned to LE or LA, the meter should read between 8 and 10 VDC.

5. With the Direction Select switch is set for left-to-right detection, blocking the left eye then blocking the right eye (within the alarm time window selected) should:

   a. Energize the alarm relays.

   b. Activate any external alarms (if connected).

   c. De-energize the alarm relays at the end of the alarm time control setting.

TROUBLE ANALYSIS

The procedures shown in Table 4 are suggested as an approach to troubleshooting the system if the correct indications cannot be achieved. These procedures are recommended for use by qualified electronics technicians only. If necessary, contact Trigg Industries, LLC Technical Support at (757) 223-7522, support@triggindustries.com.

Table 4: *Trouble Analysis*

SYMPTOM	PROBABLE CAUSE	REMEDY
No LEDs ON at Master cabinet and meter does not read 8 +/- 1 VDC when Align switch is positioned to LE or LA.	-No power to Master cabinet or Master internal power supply defective. -No power to Remote.	Check input power to Master and Remote. If input power is good to both units, replace Master cabinet.
Left or Right LED flickers	-Incorrect alignment. -Eye is failing.	Verify Optical Alignment If alignment is good, replace Master cabinet If problem persists, replace Remote cabinet.
All indications are normal but system does issue an alarm.	-Alarm relays are not energizing -Alarm contacts bad. -Circuit breakers tripped. -External wiring defective.	Verify Master Alarm CB is set Perform Operational Check and verify LEDs are illuminated for duration of alarm time setting. If so test wiring to external alarm. If not, replace Master cabinet.
Remote red source eye not brightly illuminated and IR detector eye does not have red LED (located inside eye assembly) illuminated at low intensity.	-Insufficient power to remote cabinet or internal DC power supply failed.	Ensure proper input power present at Remote cabinet T1 terminal strip. If present, replace Remote cabinet.

HARDWARE AND TOOLS

LEGEND

MC – Master Cabinet	PRC – Pitch Rotation Component
RC – Remote Cabinet	RRC – Roll Rotation Component
SS – Stainless Steel	HRC – Heading Rotation Component
LW – Lock Washer	TAM – Triple Axis Mount

NOTE: LEGEND terminology applies to Tables 5-7.

Table 5: *Hardware and Fasteners - Cabinets*

CABINETS		
Hardware/Fasteners	**Qty**	**Location**
Phillips pan-head 10-24 x 3/4" screw w/lock washer, SS	8	MC Back plate x 4 RC Back plate x 4
Phillips pan-head 4-40 x 3/8" screw, Nylon	4	MC bore-sight hole, front x 1, back x 1 RC bore-sight hole, front x 1, back x 1
Flat blade 6-32 x 1/4" screw, aluminum	21	MC Control Panel terminal strips x 15 RC Control Panel terminal strips x 6
Cord grip nut x 1-1/8", aluminum	3	MC Cord grips x 2 RC Cord grip x 1

Table 6: *Hardware and Fasteners - Triple Axis Mount*

TRIPLE AXIS MOUNT		
Hardware/Fasteners	**Qty**	**Location**
1/2" – 13 x 1" Bolt, SS	4	Joining PRC and RRC x 2 Joining RRC and HRC x 2
1/2” Flat washer, SS	4	Joining PRC and RRC x 2 Joining RRC and HRC x 2
1/2” Lock washer, SS	4	Joining PRC and RRC x 2 Joining RRC and HRC x 2
5/8" – 11 x 1-1/2" Bolt, SS	1	Heading Rotation Component
5/8” Split lock washer, SS	1	Heading Rotation Component
5/8" – 11 Nut, SS	1	Heading Rotation Component
5/16" – 18 x 1 Bolt, SS	4	Joining PRC and RRC x 2 Joining RRC and HRC x 2
5/16” Flat washer	4	Joining PRC and RRC x 2 Joining RRC and HRC x 2
5/16" Lock washer, SS	4	Joining PRC and RRC x 2 Joining RRC and HRC x 2
5/16" – 18 x 1/4" Allen head set screw	4	Heading Rotation Component

Table 7: *Required Tools*

TOOLS	TASK
Wire strippers	Electrical connections
Diagonal cutters	Electrical connections
Crimping tool	Attachment of spade-eye lugs (terminal strips)
Adjustable wrench	Cord grips (power / signal connections) Corgi nut
#0 Phillips screwdriver	Bore-sight hole access
#2 Phillips screwdriver	Back plates (control panel access)
Flat blade screwdriver (< 3/16" blade width)	Terminal strip connections
1/2" Combination wrench (ratchet recommended)	TAM adjustments
15/16" Combination wrench (ratchet recommended)	TAM attachment to mounting pole
5/16" Allen wrench	Optical alignment adjustments (HRC of TAM)
3/4" Combination wrench (ratchet recommended)	TAM adjustments
7/16" combination wrench	PRC attachment to cabinet
Watch	Troubleshooting
Multimeter	Troubleshooting

SPARE PARTS

For those customers who have qualified electronics service personnel and wish to perform field repair, the following spare parts are suggested:

Table 8: *Spare Parts List – Model 3400-Z*

PART NO.	DESCRIPTION	QTY
TGZ-301	Remote PCB Complete	1
TGZ-474	Adapter PCB Complete	1
TGZ-465	Digital PCB Complete	1
TGZ-482	Fault PCB Complete	1
TGZ-456	Power PCB Complete	1
TGZ-490	Fan PCB Complete	1
SMA30SELMHS	IR Source Eye “A”	1
SM30SRLMHS	IR Detector Eye “A”	1
E58-30TD250-HD	RED Detector Eye	1
E58-30TS250-HA	RED Source Eye	1

The above parts must be obtained from Trigg Industries, Inc. It is very important that due to tolerance and temperature conditions, correct replacement parts be obtained. Do not substitute low-cost parts or ‘almost the same’ parts as performance and long-term reliability may be sacrificed.

NOTES

(THIS SPACE INTENTIONALLY LEFT BLANK)

© 2025 TRIGG INDUSTRIES, LLC.
ALL RIGHTS RESERVED.